*picture shown with optional infeed & outfeed table and casters

WEXXAR BEL®

BEL 270

FULLY AUTOMATIC TOP & BOTTOM HOT MELT CASE SEALER

EoL
END OF LINE

BEL 270

FULLY AUTOMATIC TOP & BOTTOM HOT MELT CASE SEALER

BEL 270 INCREASES SAFETY AND ACCESSIBILITY

Operators can work safely without guarding on the BEL 270 due to the ultra-safe Snap Folders

Ultra Compact Hot Melt Case Sealer

The BEL 270 is a revolutionary fully automatic hot melt case sealer featuring Wexxar Bel's Snap Folder technology. This ultra-safe design allows the machine to be versatile and compact without the need for excessive guarding. Furthermore, Wexxar Bel's "No Gap" static compression system seals cases tightly and squarely, preventing dust and light from getting inside the case.

The BEL 270 features the Uni-Drive System which powers both side belts with a single motor to keep the belts in sync, consistently providing a square seal even after prolonged use. This simple and rugged design will deliver years of reliable and low maintenance performance.

ABOUT THE BEL 270

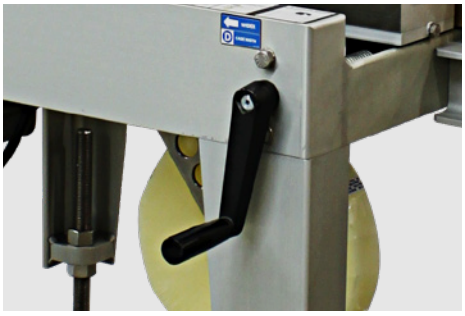

EASY CASE SIZE CHANGES

Tool-less case size changes are simple and quick with change points accessible from both operational sides of the machine.

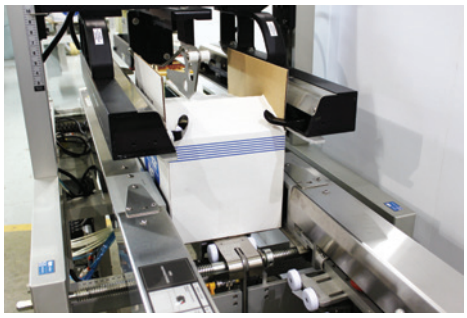

ULTRA-SAFE FLAP FOLDING

Wexxar Bel's Snap Folder keeps operators safe while freeing the machine from guarding, reducing the machine footprint and allowing for easy maintenance.

ON MACHINE INSTRUCTIONS

User-friendly pictorial guides and color-coded labeling for convenient operation and size changes.

COMPLETE SOLUTION

BEL 505 SERIES CASE FORMER

Semi-automatic case forming and packing stations provide an efficient and ergonomic solution for hand pack lines. The machine folds and holds the case in place for the user to pack with both hands.

WF20 AUTOMATIC CASE ERECTOR

Fully automatic tape or hot melt case erector with Wexxar Bel's patented Pin & Dome technology for reliable and consistent case forming.

PRODUCT AND CASE DELIVERY CONVEYORS

Modular product and case delivery conveyors which can be customized with multiple packing stations for convenient case forming, packing and sealing.

CONFIGURATION

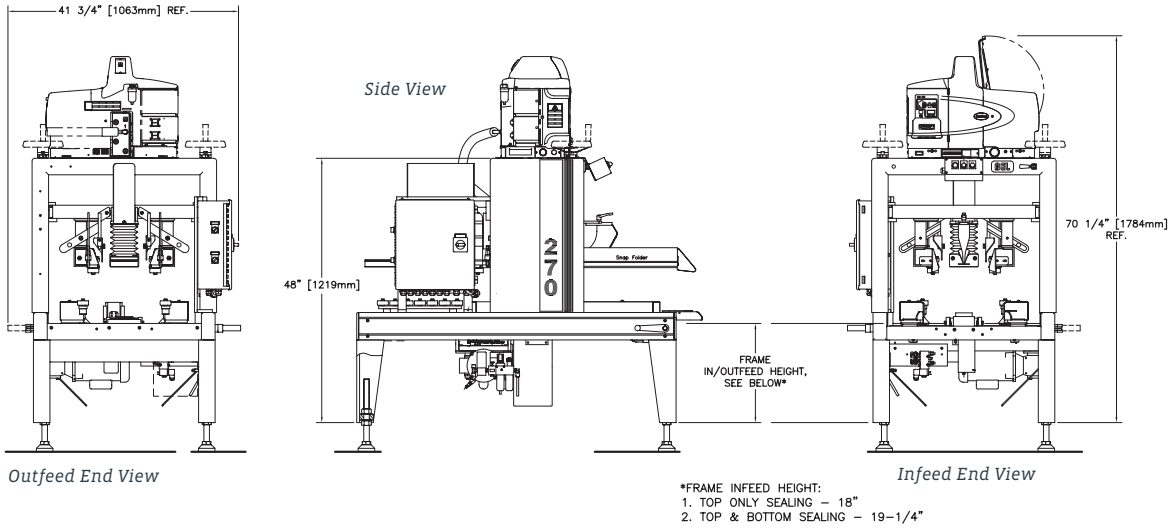

FEATURES AND BENEFITS

- Snap Folder ultra-safe design folds flaps without the use of dangerous flap kickers.
- Uni-Drive squaring technology that provide consistent and uniform seal on cases.
- Class leading ultra compact machine footprint for applications with limited floor space.
- High tensile anodized aluminum C-beam frame provides superior strength and corrosion resistance.
- Paint-free finish guards provides a clean finish and protection against contamination and the environment.

OPTIONAL MODIFICATIONS

- Modifications for undersized or oversized cases
- Enviroguard washdown options available
- Gap Flap or other case style modifications
- Custom voltages
- Custom guarding

OPTIONAL ACCESSORIES

- Locking Casters
- Digital Dial Indicators
- Infeed/Outfeed Table or Conveyor
- Separate Disconnect for hot melt

PRODUCT SPECIFICATIONS

Machine Weight	650 lbs
Machine Dimensions	56″(L) x 33″(W) x 60″(H)
Air	0.13 cubic feet per cycle at 90 p.s.i.
Electrical	120 Volts, 1PH, 60 Hz - 8amp draw
Speeds	up to 25 cases per minute

Specifications are subject to change without notice.

CASE SIZE RANGE

	LENGTH	WIDTH	HEIGHT
Minimum (top sealing only)	8" 203 mm	6 1/2″ 165 mm	6 1/4″ 159 mm
Maximum (top sealing only)	20″ 508 mm	15″ 381 mm	15″ 381 mm
Minimum (top and bottom seal only)	8″ 203 mm	8 1/2″ 216 mm	5 1/4″ 133 mm
Maximum (top and bottom seal only)	16″ 406 mm	15″ 381 mm	14 1/4″ 362 mm

INFEED/OUTFEED HEIGHT

Minimum	Top only: 20 1/2″ (520 mm) Top and bottom: 21 3/4″ (552 mm)
Maximum	Top only: 28 3/4″ (730 mm) Top and bottom: 30″ (762 mm)

PROMACH®

WEXXAR BEL

At Wexxar Bel, corrugated container packaging applications are limited only by the imagination. Our Wexxar case formers and case sealers have been installed in nearly 40 countries and consistently bring customers the lowest cost of ownership and the highest standards of safety. Wexxar also offers the BEL line of corrugated box sealers, tapers, and packing systems as well as the IPAK line of tray and bliss formers, stackers, and sealers systems. As part of the ProMach End of Line business line, Wexxar helps our packaging customers protect and grow the reputation and trust of their consumers. ProMach is performance, and the proof is in every package.

LINC SYSTEMS

800.513.9918 | LINCsystems.com

©2018 ProMach Inc. ProMach reserves the right to change or discontinue specifications and designs shown in this brochure without notice or recourse
PM-WEX-PB613_Wexxar Bel_BEL 270. Last revised 09.27.18.